BOUNCE LINES MULTI™

SUSPENSION

TYPE:

PROJECT NAME:

SPECIFICATION SHEET

tossB®

BOUNCE LINES MULTI™

SUSPENSION

TYPE:

PROJECT NAME:

DIMENSIONS

Bounce Lines is available in two structural sizes with an additional choice of three sizes of LED spheres.

Bounce Lines 120: Length of 120cm (47.24”)
Bounce Lines 180: Length of 180cm (70.86”)

Sphere S: Diameter of 100mm (3.93”)
Sphere M: Diameter of 150mm (5.9”)
Sphere LG: Diameter of 200mm (7.87”)

The height (thickness) of the Lines structure is 12mm (0.47”)

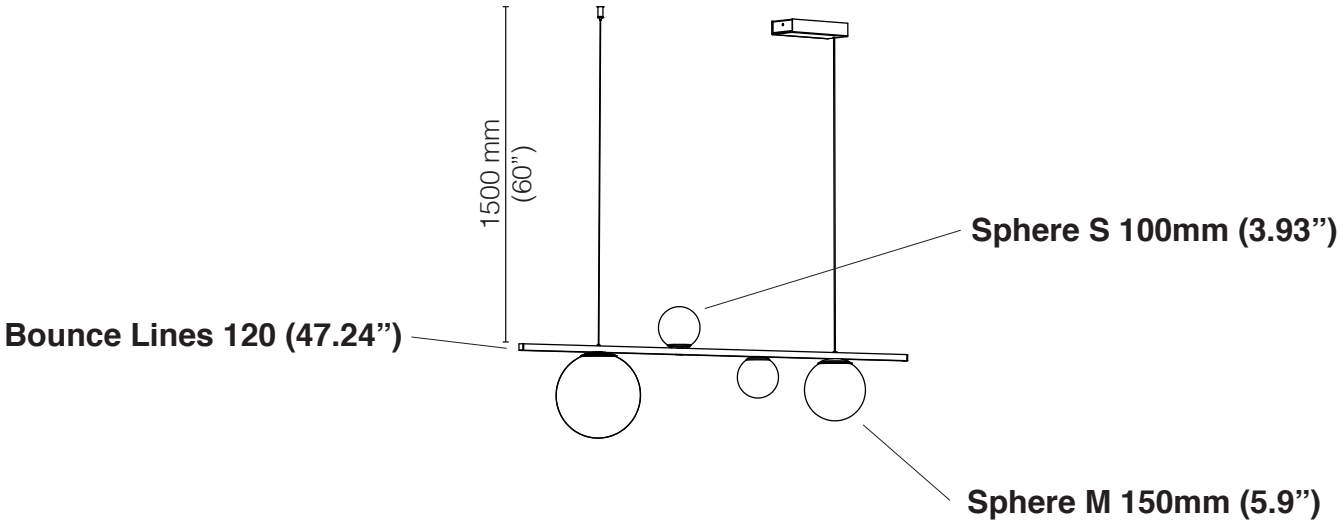

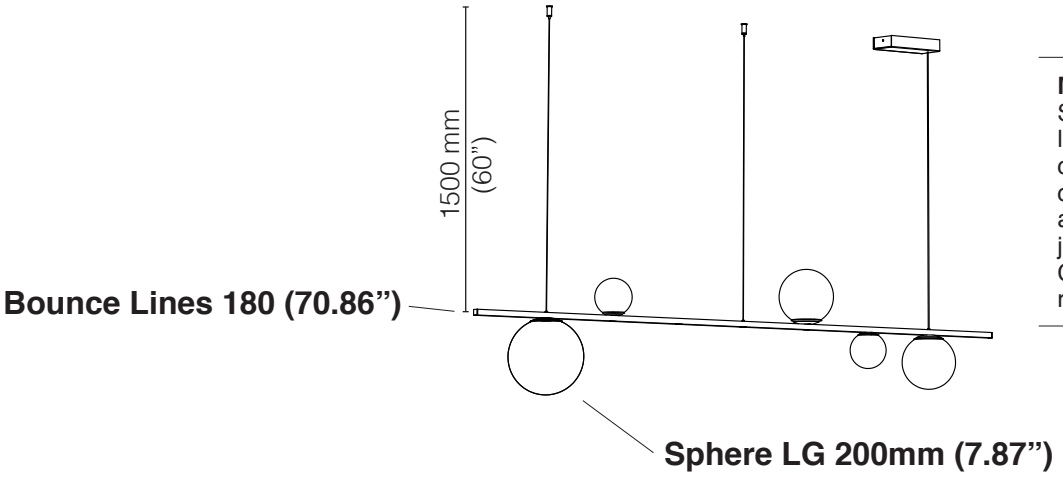

Mounting:
Supplied with 60” (1500mm) long suspension aircraft cables (standard) and canopy. To be installed on a standard 4” octogonal junction box.
Custom cable length on request (Please specify).

SPECIFICATION SHEET

BOUNCE LINES MULTI™

SUSPENSION

TYPE:

PROJECT NAME:

BOUNCE LINES 120 -S-S-M-LG-

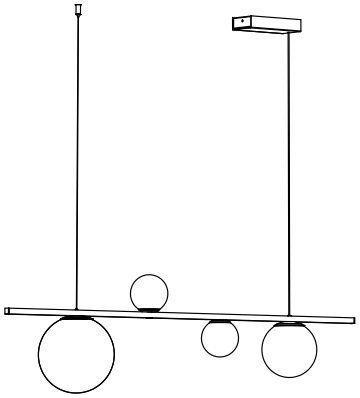

LAMP TYPE	LED
COLOUR TEMP.	2700K
WATTAGE	2W/2W/4W/10W

ORDER CODE

BLACK	L30T111H37DZL
BRONZE	L30T111H37DOE
BRUSHED BRASS	L30T111H37DLB
WHITE	L30T111H37DWL

BOUNCE LINES 180 -S-S-M-M-LG-

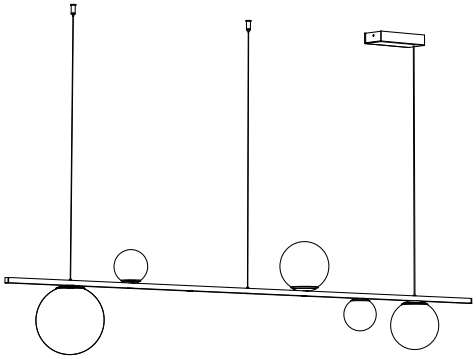

LAMP TYPE	LED
COLOUR TEMP.	2700K
WATTAGE	2W/2W/4W/4W/10W

ORDER CODE

BLACK	L30T111H39DZL
BRONZE	L30T111H39DOE
BRUSHED BRASS	L30T111H39DLB
WHITE	L30T111H39DWL

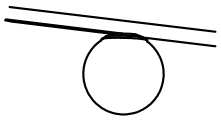

sphere S: 100mm (3.93")
profile: h12

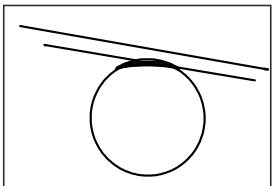

sphere M: 150mm (5.9")
profile: h12

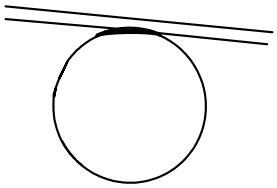

sphere LG: 200mm (7.87")
profile: h12

SPECIFICATION SHEET

ORDERING INFO

Model (Order Code)	- 27 -	
	LED	Dimming Options
	◯ 27: 2700K	◯ 120V LTE ◯ 120V-277V 0-10V (Universal Voltage)

Intertek